MAGNIFYING MIRROR

E05-AC40236

TECHNICAL DATA

ITEM DESCRIPTION	3X MAGNIFYING MIRROR – 2 ARMS		
ITEM CODE	E05-AC40236		
DIMENSIONS	ARM MAX 330 MM – MIRROR 240 MM		
FINISHES	P00	–	CHROME
	P01	–	MATT BLACK
	P06	–	LIGHT GUNMETAL
	P18	–	POLISHED CHAMPAGNE
	P19	–	BRUSHED CHAMPAGNE
SPECIFICATION	• 3X MAGNIFYING MIRROR • WITHOUT LED LIGHT		

TECHNICAL DRAWINGS

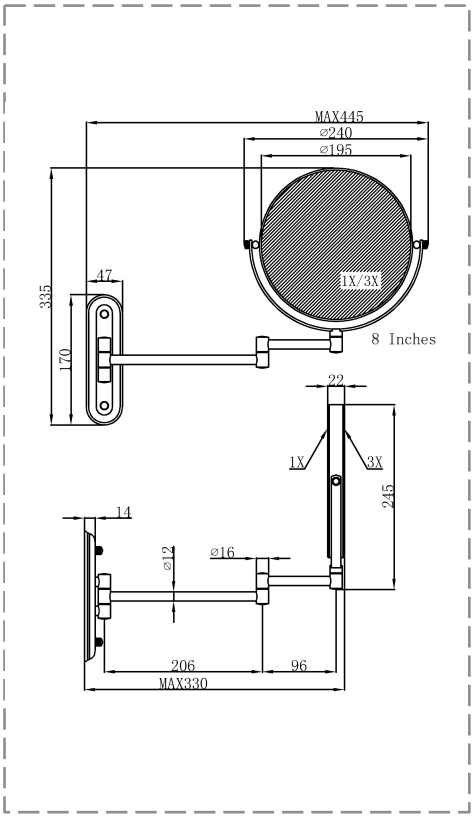

TECHNOLOGY - CERTIFICATION

PRODUCT TYPE	:	WALL MOUNTED
MATERIAL	:	BRASS
STANDARD	:	CE STANDARD