QUADRO PLUS

E06-SW10274

TECHNICAL DATA

ITEM DESCRIPTION	UNDER-COUNTER WASHBASIN
ITEM CODE	E06-SW10274
DIMENSIONS	600 X 400 X 180 MM
FINISHES	C00 | WHITE
	C02 | MATT WHITE

TECHNICAL DRAWINGS

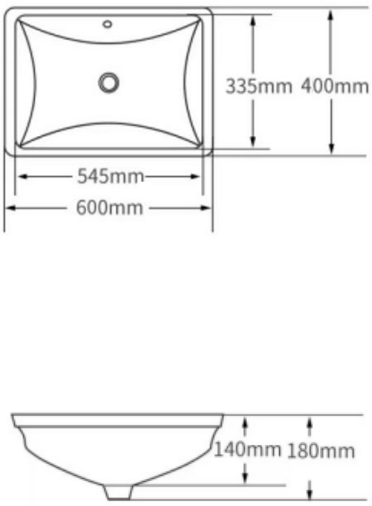

TECHNOLOGY - CERTIFICATION

- Under-counter
- With overflow
- Mounting kit included