TUSCANY

E06-SW10232

TECHNICAL DATA

ITEM DESCRIPTION	WALL HUNG WC
ITEM CODE	E06-SW10232
DIMENSIONS	520 X 390 X 345 MM
FINISHES	C00 | WHITE

TECHNICAL DRAWINGS

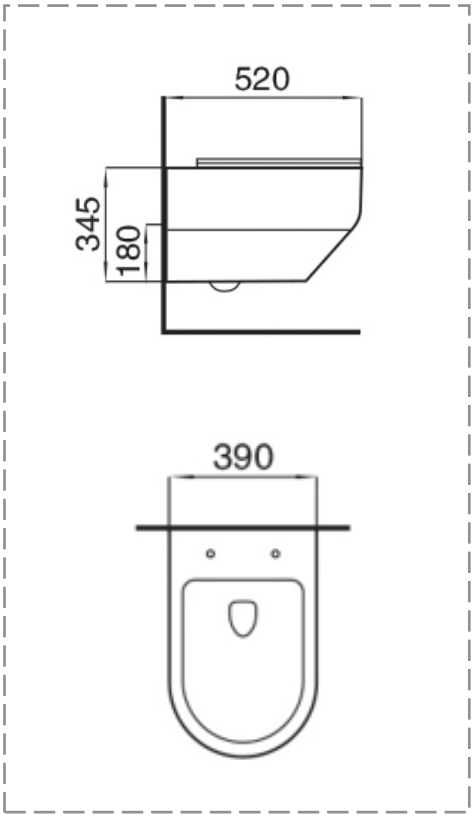

TECHNOLOGY - CERTIFICATION

- Tornado-jet flush
- Installation Kit
- Seat And Cover Included
- Silent Flush
- Rimless
- Washdown For Min. 4,5/3-l-flush