E02-SW20143

TECHNICAL DATA

ITEM DESCRIPTION	ACRYLIC BUILT IN BATHTUB		
ITEM CODE	E02-SW20143		
DIMENSIONS	1700 X 850 X 400 MM		
FINISHES	A00	|	WHITE
	A01	|	BLACK
	A02	|	WHITE AND BLACK

TECHNICAL DRAWINGS

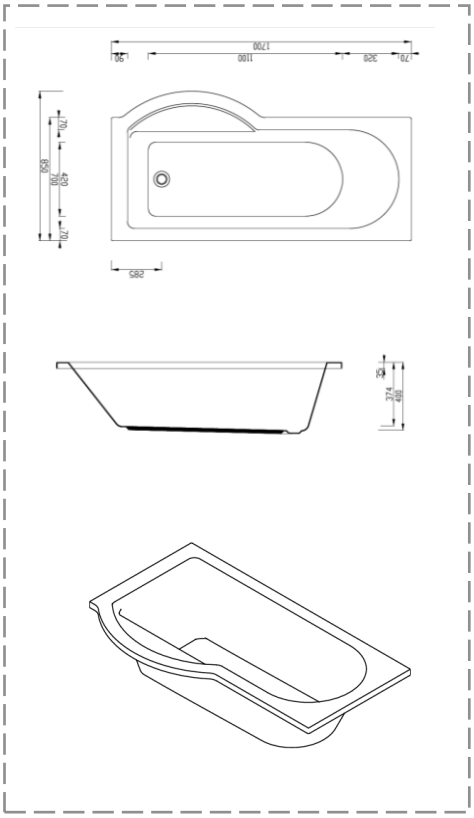

SPECIFICATION

HOLE	:	WITHOUT TAP HOLE
OVERFLOW	:	WITH OVERFLOW
OUTLET	:	SIDE OUTLET