LUKE

E02-SW20114

TECHNICAL DATA

ITEM DESCRIPTION	ACRYLIC BACK TO WALL BATHTUB		
ITEM CODE	E02-SW20114		
DIMENSIONS	1800 X 880 X 590 MM		
FINISHES	A00	|	WHITE
	A01	|	BLACK
	A02	|	WHITE AND BLACK

TECHNICAL DRAWINGS

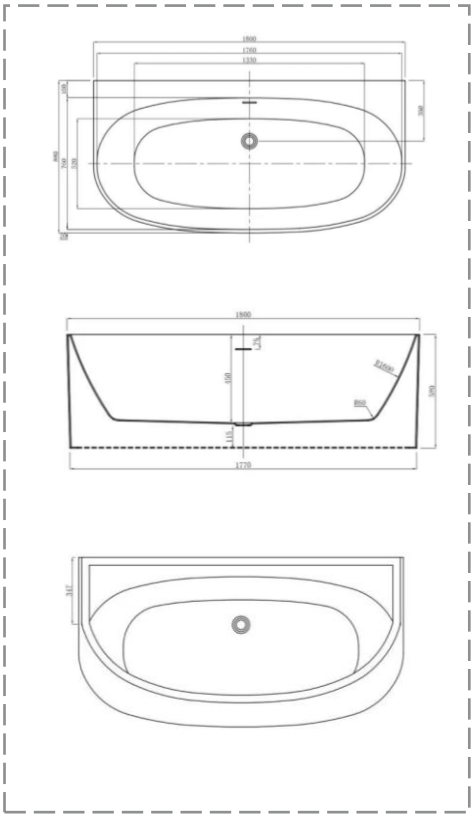

SPECIFICATION

HOLE	:	WITHOUT TAP HOLE
OVERFLOW	:	WITH OVERFLOW
OUTLET	:	CENTER OUTLET