E02-SW20103

TECHNICAL DATA

ITEM DESCRIPTION	ACRYLIC BACK TO WALL BATHTUB
ITEM CODE	E02-SW20103
DIMENSIONS	1660 X 800 X 565 MM
FINISHES	A00 | WHITE
	A01 | BLACK
	A02 | WHITE AND BLACK

TECHNICAL DRAWINGS

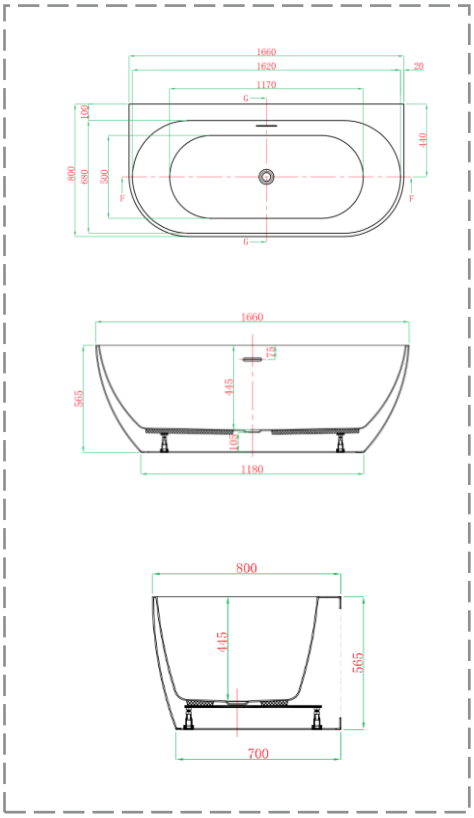

SPECIFICATION

HOLE	:	WITHOUT TAP HOLE
OVERFLOW	:	WITH OVERFLOW
OUTLET	:	CENTER OUTLET