E02-SW20097

TECHNICAL DATA

ITEM DESCRIPTION	ACRYLIC BACK TO WALL BATHTUB
ITEM CODE	E02-SW20097
DIMENSIONS	1800 X 750 X 580 MM
FINISHES	A00 | WHITE
	A01 | BLACK
	A02 | WHITE AND BLACK

TECHNICAL DRAWINGS

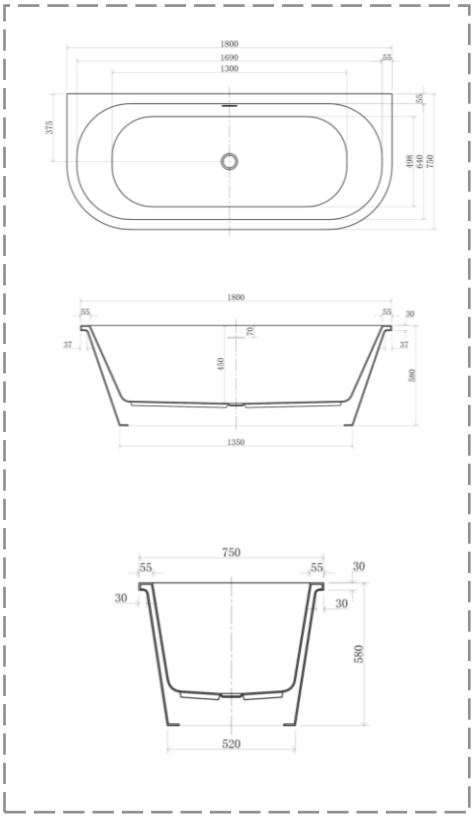

SPECIFICATION

HOLE	:	WITHOUT TAP HOLE
OVERFLOW	:	WITH OVERFLOW
OUTLET	:	CENTER OUTLET