E02-SW20053

TECHNICAL DATA

ITEM DESCRIPTION	ACRYLIC FREE STANDING BATHTUB
ITEM CODE	E02-SW20053
DIMENSIONS	1640 X 800 X 845 MM
FINISHES	A00 | WHITE
	A01 | BLACK
	A02 | WHITE AND BLACK

TECHNICAL DRAWINGS

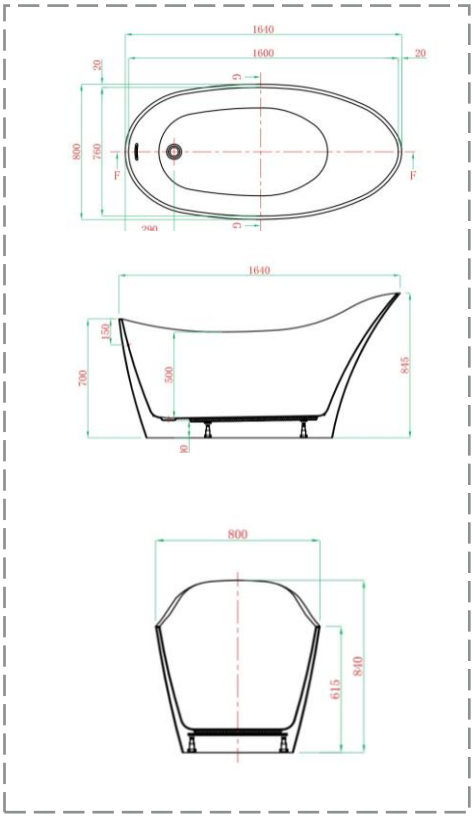

SPECIFICATION

HOLE	:	WITHOUT TAP HOLE
OVERFLOW	:	WITH OVERFLOW
OUTLET	:	CENTER OUTLET