PONTUS

E01-SW10234

TECHNICAL DATA

ITEM DESCRIPTION	FLOOR STANDING WC
ITEM CODE	E01-SW10234
DIMENSIONS	560 x 360 x 440 MM
FINISHES	C00 | WHITE

TECHNICAL DRAWINGS

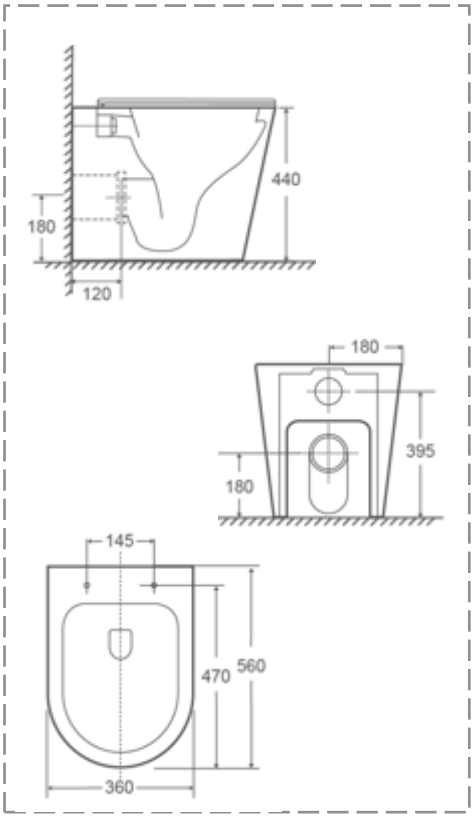

TECHNOLOGY - CERTIFICATION

- Floor standing back to wall tornado-jet flush
- Installation Kit
- Seat And Cover Included
- Silent Flush
- Rimless
- Washdown For Min. 4,5/3-l-flush