FLOSSO

E01-SW10233

TECHNICAL DATA

ITEM DESCRIPTION	FLOOR STANDING WC
ITEM CODE	E01-SW10233
DIMENSIONS	630 X 380 X 820 MM
FINISHES	C00 | WHITE

TECHNICAL DRAWINGS

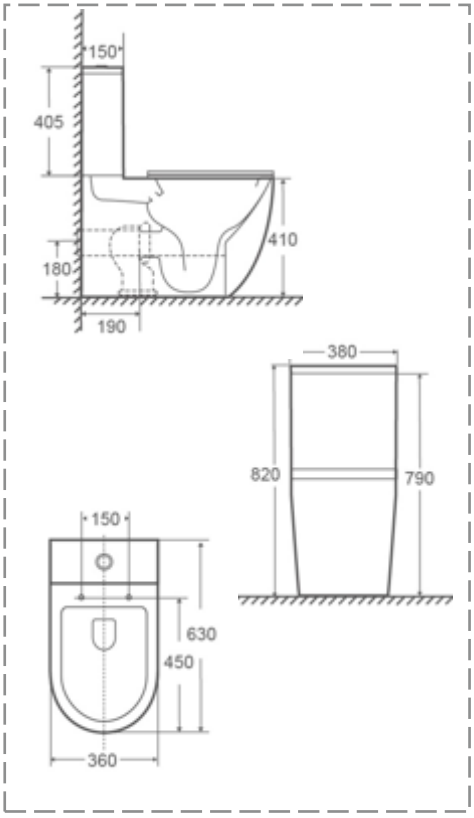

TECHNOLOGY - CERTIFICATION

- Tornado-jet flush
- Exposed tank included
- Installation kit
- Rimless with P- trap
- Seat and cover included
- Washdown For Min. 4,5/3-l-flush