E01-SW10156

TECHNICAL DATA

ITEM DESCRIPTION	UNDER-COUNTER WASHBASIN
ITEM CODE	E01-SW10156
DIMENSIONS	690 x 425 x 215 MM
FINISHES	C00 | WHITE

TECHNICAL DRAWINGS

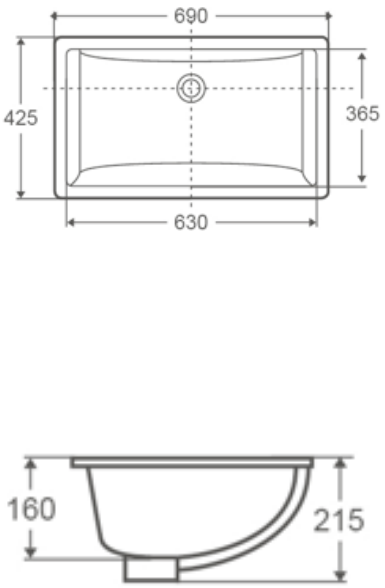

TECHNOLOGY - CERTIFICATION

- Under-counter
- Without overflow
- Mounting kit included