E01-SW10143

TECHNICAL DATA

ITEM DESCRIPTION	ABOVE COUNTER WASHBASIN
ITEM CODE	E01-SW10143
DIMENSIONS	500 x 380 x 135 MM
FINISHES	C00 | WHITE

TECHNICAL DRAWINGS

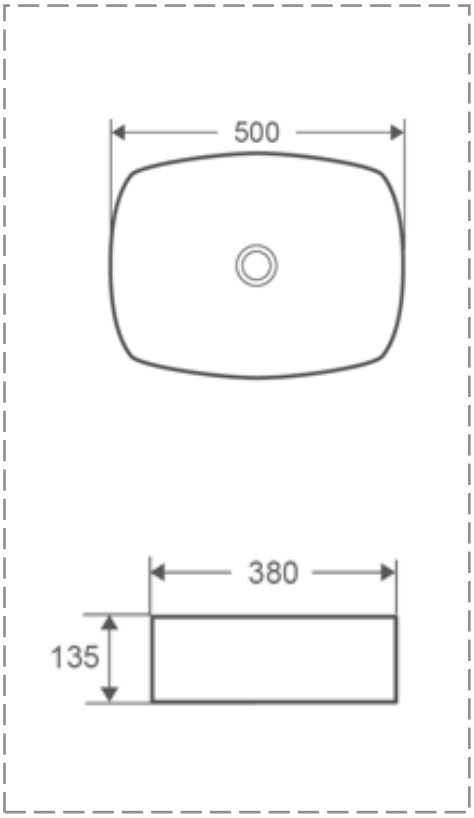

TECHNOLOGY - CERTIFICATION

- Above counter
- Without overflow
- without tap hole