RECTO

E01-SW10127

TECHNICAL DATA

ITEM DESCRIPTION	ABOVE COUNTER WASHBASIN
ITEM CODE	E01-SW10127
DIMENSIONS	530 x 425 x 165 MM
FINISHES	C00 | WHITE

TECHNICAL DRAWINGS

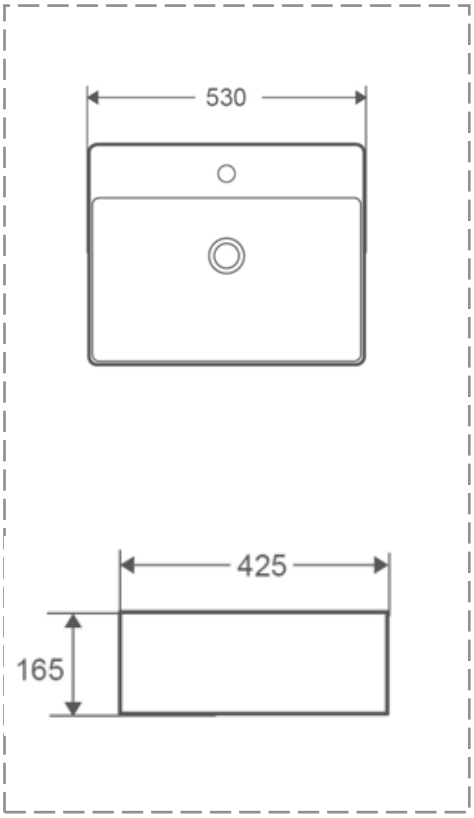

TECHNOLOGY - CERTIFICATION

- Above counter
- With overflow
- One tap hole