E01-SW10113

TECHNICAL DATA

ITEM DESCRIPTION	ABOVE COUNTER WASHBASIN
ITEM CODE	E01-SW10113
DIMENSIONS	500 X 400 X 135 MM
FINISHES	C00 | WHITE

TECHNICAL DRAWINGS

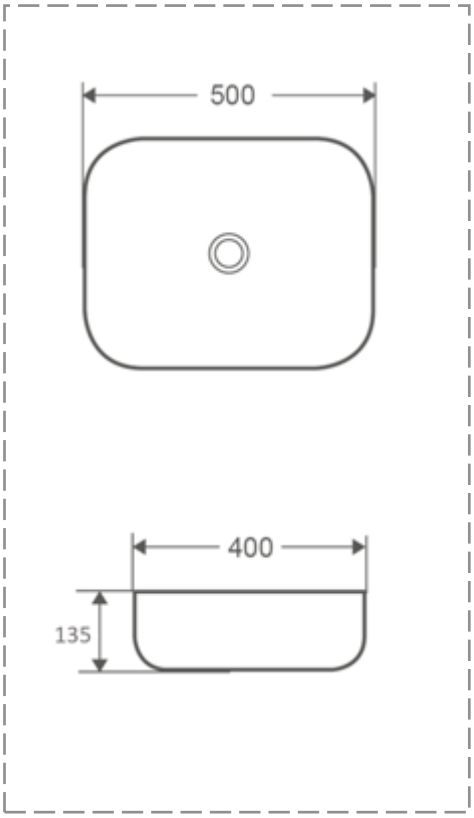

TECHNOLOGY - CERTIFICATION

- Above counter washbasin
- Without overflow
- Without tap hole