E01-SW10023

TECHNICAL DATA

ITEM DESCRIPTION	UNDER-COUNTER WASHBASIN
ITEM CODE	E01-SW10023
DIMENSIONS	515 X 380 X 185 MM
FINISHES	C00 | WHITE

TECHNICAL DRAWINGS

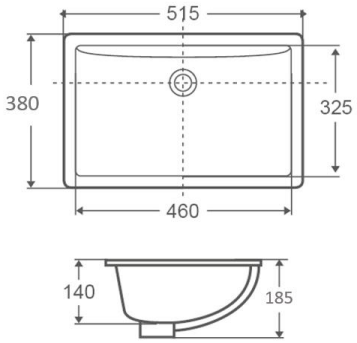

TECHNOLOGY - CERTIFICATION

- Under-counter
- Without overflow
- Mounting kit included