PONTUS

E01-SW10003

TECHNICAL DATA

ITEM DESCRIPTION	FLOOR STANDING BIDET
ITEM CODE	E01-SW10003
DIMENSIONS	560 X 360 X 410 MM
FINISHES	C00 | WHITE

TECHNICAL DRAWINGS

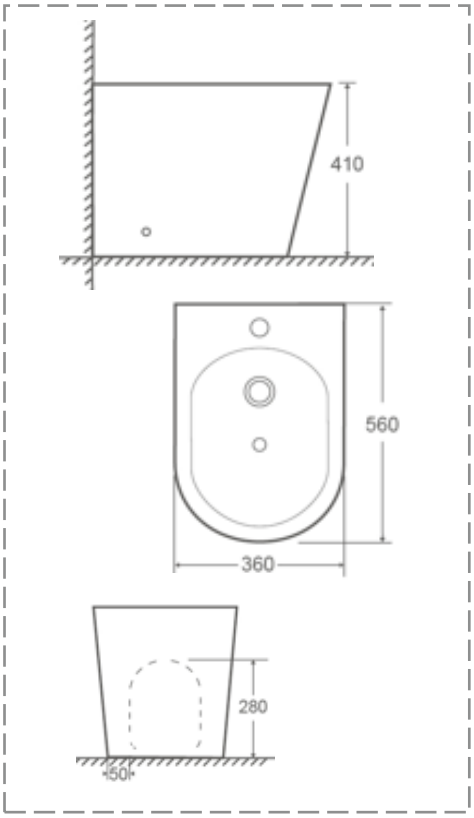

TECHNOLOGY - CERTIFICATION

- Floor standing back to wall
- With one taphole
- Installation Kit
- With overflow
- With one taphole